FASSI

F330D.23

❖	=Mmax	224064 lbs.ft
	=Pmax	25353 lbs
	=Pmax	20944 lbs
	=Pmax	5203 lbs

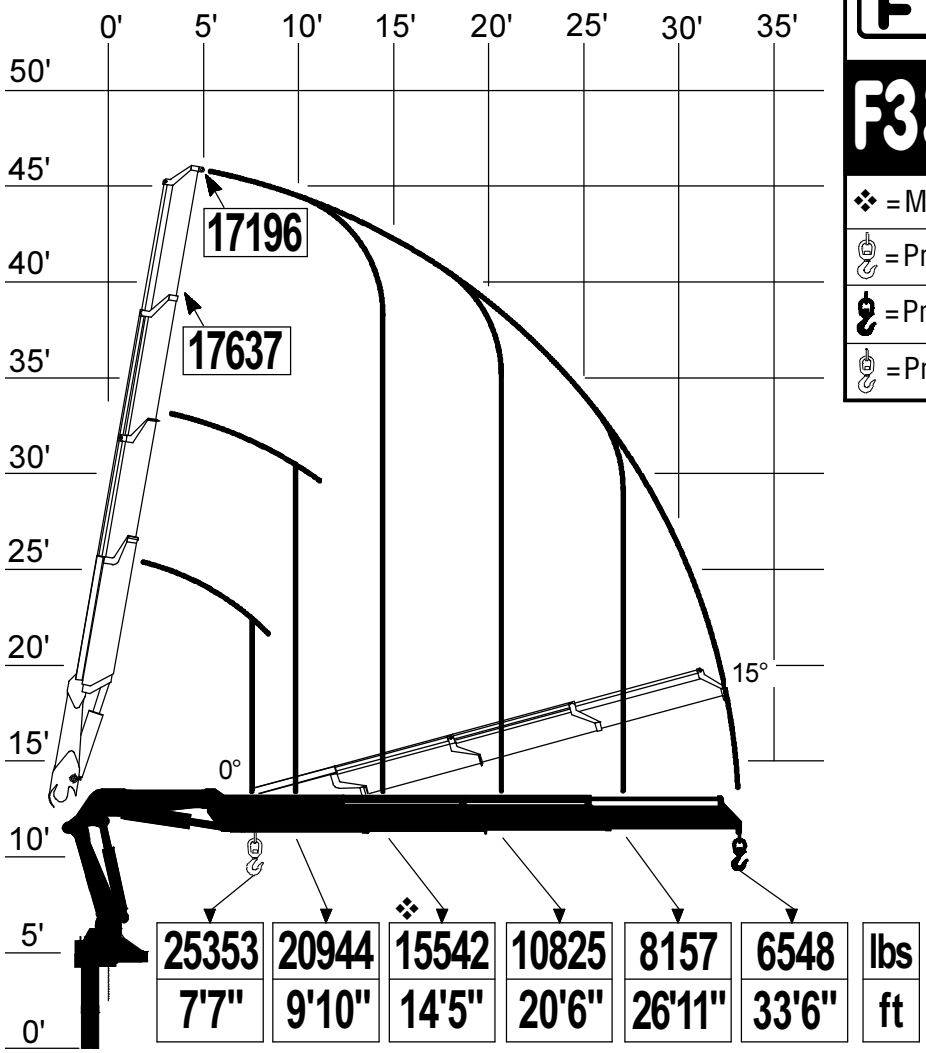

25353	20944	15542	10825	8157	6548	lbs
7'7"	9'10"	14'5"	20'6"	26'11"	33'6"	ft

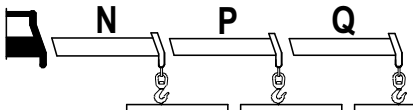

5203	4067	3241	lbs
40'4"	47'11"	55'5"	ft

lbs N (276) P (247) Q (207)

DE 6993A